ACCUREX

MM



Precision balances

MM series. Compact, viable and portable scale.

- Ideal for agri-food use.
- Low power consumption: batteries with long-lasting power.
- Lightweight and easy to transport.

Stainless steel pan
Easy to clean, size: 176x176 mm.



Easy-to-read display
Backlit LCD display.

Main functions

- Check weighing with audible indication.
- Auto power-off function.
- Tare function.
- Weighing units: kg, g, lb and oz.

Technical features

Model	MM-6000
Reference	6718
Capacity	6 kg
Readability	1g
Weighing units	g (kg), lb, oz
Structure	ABS
Power	100-240V~50/60Hz
Battery	3 batteries AA 1,5V
Working temperature	0°C / +40°C
Pan size (mm)	176x176
External size (mm)	245x202x80
Total net weight (kg)	1,2

External dimensions (mm)
MM Series

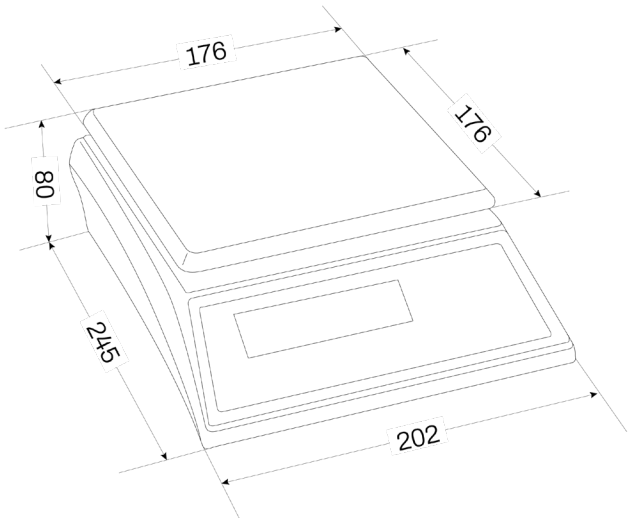

002/02102026

Reliable weighing for everyday operations.