ACCUREX

TCamel Y



Pallet Truck Scale

For moving and weighing loads in a single operation in warehouses and logistics areas.

- Manual pallet truck with built-in scale.
- Weighing and lifting in one step.
- Capacity of 2,000 kg and 1 kg resolution.
- High contrast LED display.
- Instant weighing memory function (Hold).
- Accumulation and totalisation of weighings.
- Tare of pallets and containers.
- Checkweighing with upper and lower limits, HI/OK/LO indication.
- Rechargeable Li-Ion battery, up to 48 hours of continuous use.
- Steel structure with polyurethane wheels.

Tare function
The weight of the pallet or container can be deducted by pressing the tare key, showing the net weight of the load.



Hold function
Keeps the weight value on the display for later review, so the load can be moved without interrupting the operation.

2-in-1 pallet truck and scale
Move and weigh loads in a single operation, before or after transport, simplifying daily workflows and eliminating the extra trip to a floor scale.

Productivity anywhere
Its compact design and ease of use allow it to operate in any corner of the warehouse, providing fast results, optimizing work time and reducing downtime.

Weight accumulation and totalisation
Adds multiple weighings and displays the accumulated total, giving greater control over the load handled during a shift or an order.

High contrast LED display
Bright LED digits that remain clearly legible in low-light warehouse conditions and from the operator's position behind the handle.

Long-life rechargeable battery
Two Li-Ion batteries provide up to 48 hours of continuous operation, so the pallet truck scale can work through several shifts between charges.

Technical specifications

Model	TCamel Y 2T	TCamel YP 2T
Reference	10048	10049
Capacity	2.000 kg	2.000 kg
Resolution	1 kg	1 kg
Weighing units	kg	kg
Operating temperature	-0º C / +40º C	-0º C / +40º C
Power supply	2x Li-Ion battery 3,7V - 4000mA/H	2x Li-Ion battery 3,7V - 4000mA/H
Battery life	48h of continuous use	48h of continuous use
Integrated printer	No	Yes
Display	LED	LED
Segments	4 digits	4 digits
Digit height	2,54 mm	2,54 mm
Indicator material	ABS	ABS
Structure material	Steel	Steel
Wheel material	Polyurethane	Polyurethane
Fork dimensions	1160 x 560 mm	1160 x 560 mm
Fork height	Min: 85 mm / Max: 205 mm	Min: 85 mm / Max: 205 mm
External dimensions	1580 x 560 x 1220 mm	1580 x 560 x 1220 mm
Packaging dimensions	1550 x 580 x 445 mm	1550 x 580 x 445 mm
Total net weight	87 kg	87 kg
Total weight incl. packaging	99 kg	99 kg

External dimensions (mm)

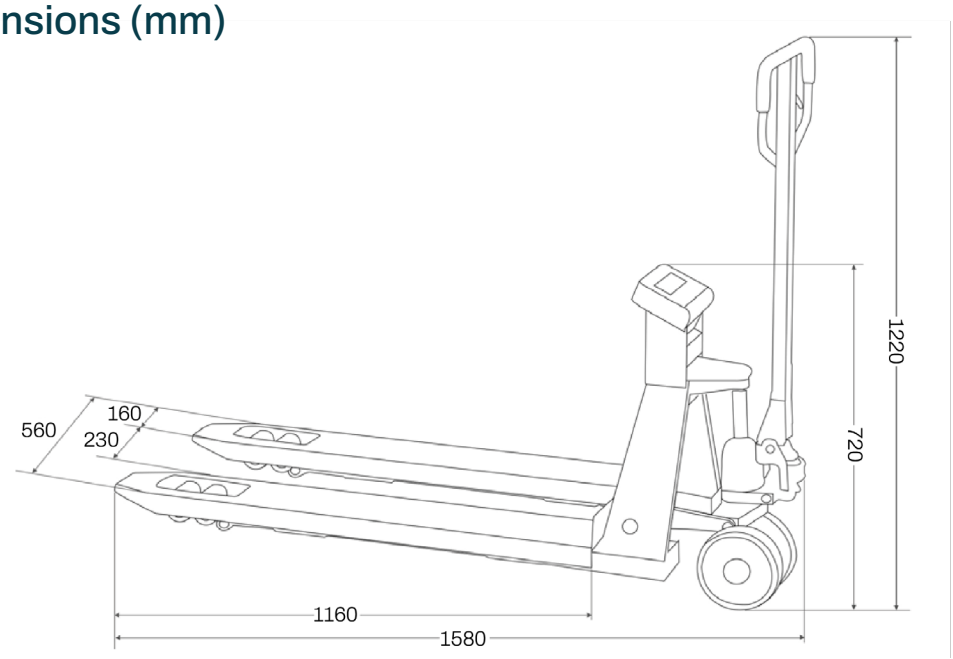

003/20261113

Reliable weighing for everyday operations.