ACCUREX

PCX-200



Portable Industrial Scale And Separate Display

Its extra-flat platform and separate display make it ideal for use on a wall or benchtop.

- Industrial scale with stainless steel plate.
- Separate display with extendable cable.
- Highly resistant internal structure.
- Low height weighing platform, only 70 mm.
- Tare function for containers or boxes.
- Illuminated display for easy reading.
- Automatic switch off function when using internal batteries.
- Power supply: 220 V mains connection or internal batteries.
- Capacity 200 kg and resolution 50 g.
- Operating time with internal batteries, up to 50 hours.

Tare function
The container weight can be deducted by pressing the tare key.

Flexible display placement
The display comes with a 1.5 m extendable cable and can be placed on a bench or wall-mounted (support bracket included).



Zero adjustment function
The scale can be zeroed by pressing a key.

Speed and precision in every weighing
Delivers stable and accurate results in less than 2 seconds. Its ultra-fast response time optimizes workflow efficiency without compromising precision.

Extra-flat stainless steel platform
With a height of only 70 mm, the 310 × 390 mm stainless steel platform makes loading heavy or bulky items easier and safer, while resisting knocks, moisture and daily wear.

Mains or battery operation
Runs on 220 V mains power or on four standard 1.5 V AA batteries, with up to 50 hours of operation on batteries. The auto power-off function switches the scale off during periods of inactivity to extend battery life.

Factory calibrated and certified
Supplied fully calibrated and adjusted by our Barcelona calibration laboratory, audited annually by the European notified body NMi, ensuring reliability and compliance with the highest standards.

Technical specifications

Model	PCX-200
Reference	71962
Capacity	200 kg
Resolution	50 g
Weighing units	kg, lb, oz
Power	220 V, 50 Hz mains or 4 x 1.5 V AA batteries
Working temperature	0º / +40ºC
Structure	ABS and stainless steel
Weighing platform dimensions (mm)	310 x 390
Net weight (kg)	3.3
Packaging dim. (mm)	430 x 480 x 45
Total weight with packaging (kg)	3.9

External dimensions (mm)

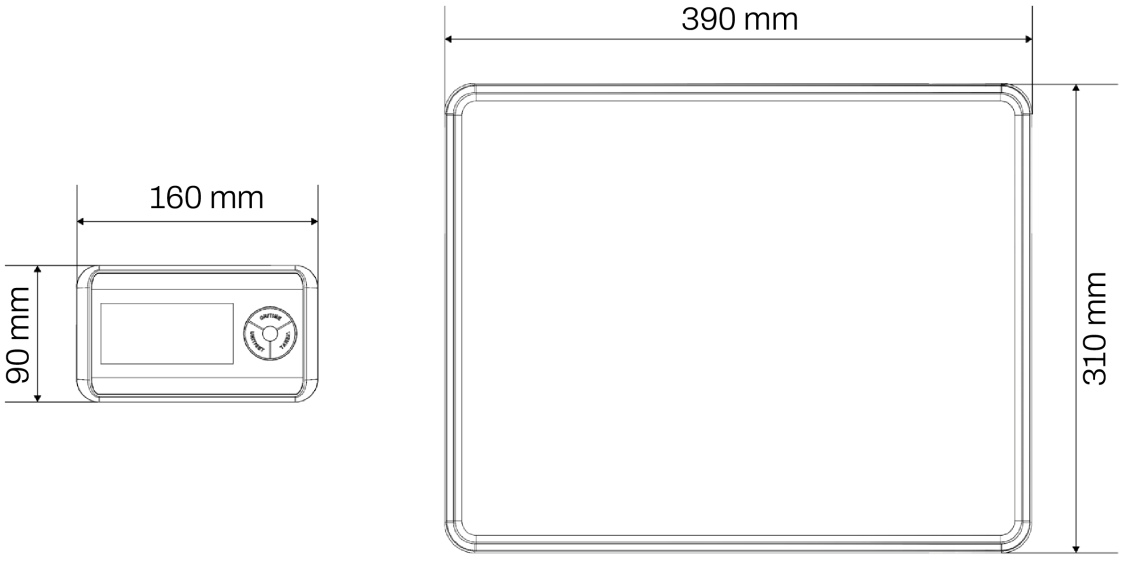

002/20260908

Reliable weighing for everyday operations.